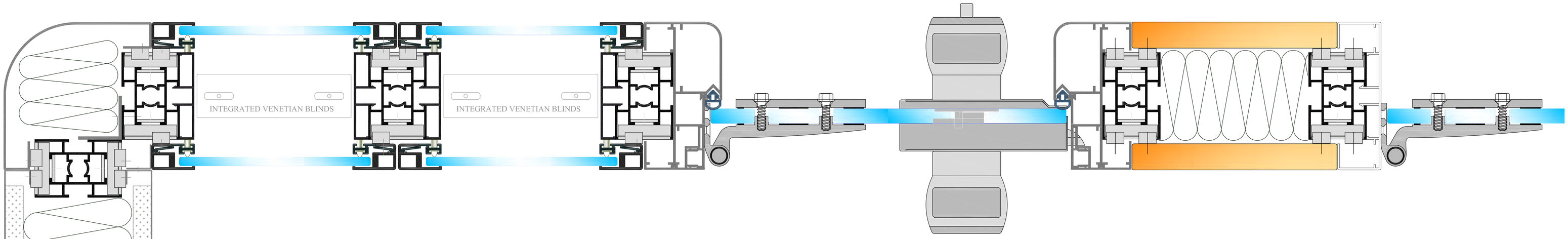

MAIN SUBDIVISIONS

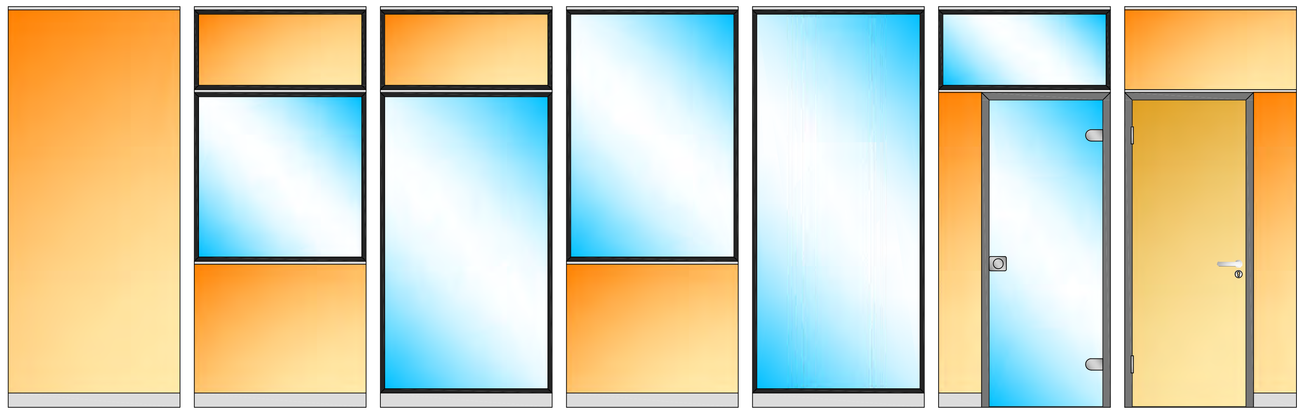

- Vision Panels: Glass (float, tempered, or laminated,...) - with or without Venitian Blinds
- Opaque Panels : Metal (pre-coated steel sheets / aluminium) / Wood
- Doors: Metal (pre-coated steel sheets / aluminium) / Wood / Glass

VERTICAL SECTIONS

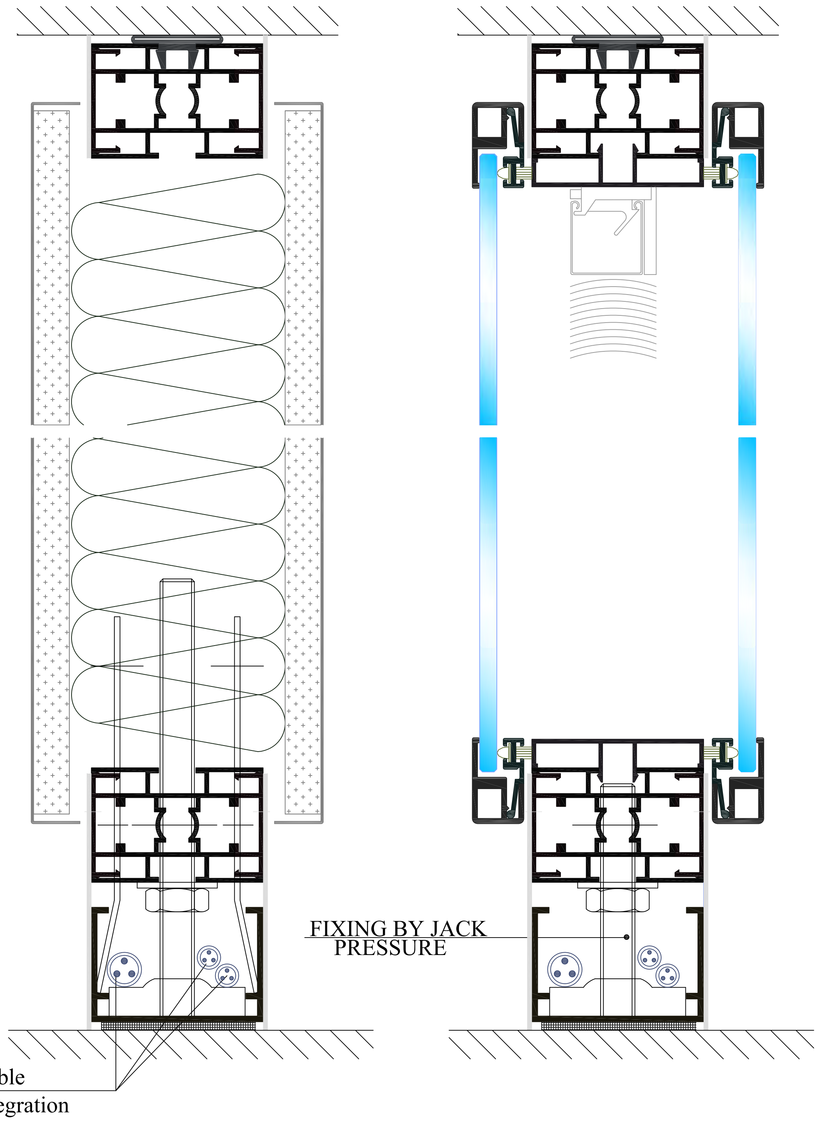

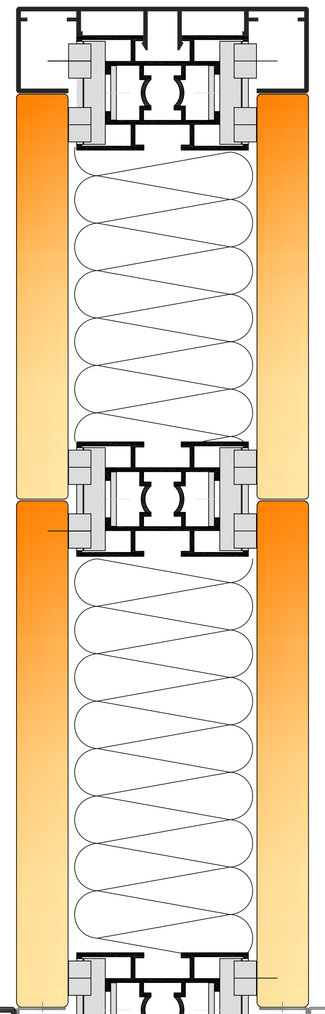

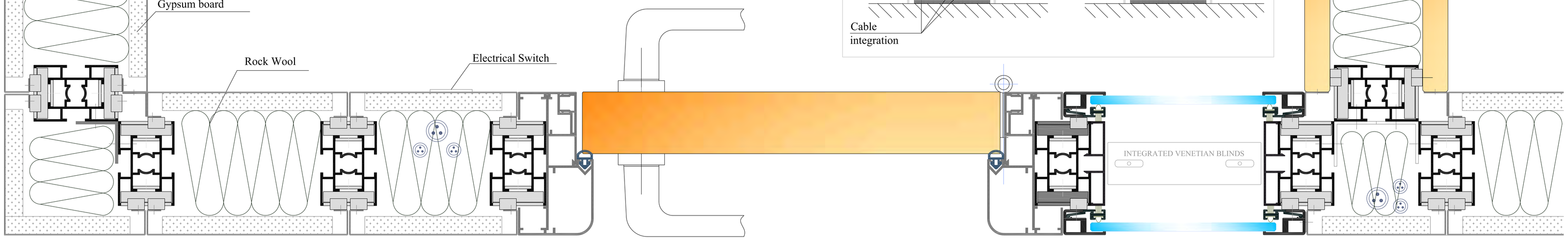

ASNAF
HUSSEINI Group

Intellectual Property of ASNAF Husseini Group s.a.r.l.
Copyright (1997-2010) - Not to be changed, used, copied or distributed in any form, without prior written authorisation from ASNAF Husseini Group s.a.r.l.

System
MONOLINE
GENERAL PLAN

Drawing date: 20/3/1997
Modifcation date: 1/10/2009
Scale: 1/1
g
N-200 f